DART AEROSPACE

Dart Hawkesbury
1270 Aberdeen St
Hawkesbury, ON
K6A 1K7
Canada

Tel (613) 632-5200

647.1713

Job Sheet 168293

Part No: 647.1713 **Job Qty:** 20 ea
Part Name: Spacer

Part Weight: 0 lbs **Status:** Scheduled **Priority:** Medium
Job Created: 11/13/17 **Job Tracking No:**
Due Date: 11/28/17 **Created By:** Linda Lacelle
Type: Stock **Description:**

Note: DWG REV E IPP REV:A 12.10.04 NEW ISSUE DD VERF:JFS
Ship Via:

Bill of Materials

Job Routing

Op No	Operation	Qty	Start Date	Due Date	Standard Setup hrs	Standard Run Hrs	Workcenter/Supplier Workcenter / Supplier	Lead Time	Sign-off
90	**Start up Operation**	20 Ea		11/27/17	0.00	0.00	Start Up Container		DAS DAS
110	**Hardinge**	20 pcs		11/28/17	0.00	2.98	Hardinge		23 23
120	**QC**	20 pcs		11/28/17	0.00	0.00	QC2		9-89 9-89
130	**QC**	20 pcs		11/28/17	0.00	0.00	QC8		FJ 18-1-13
160	**Outsource**	20 pcs		11/28/17	0.00	0.00	Outsource4		AT 18/01/09
170	**Packaging**	20 pcs		11/28/17	0.00	0.00	Packaging2		AP 18/01/07
180	**QC**	20 pcs		11/28/17	0.00	0.00	QC5		38 FEB 0 8 2018
210	**Packaging**	20 pcs		11/28/17	0.00	0.00	Packaging3 CCK 108		DAS 89 821
220	**QC21-SA**	20 Ea		11/28/17	0.00	0.00	QC21		21 9.00 FEB 1 2 2018

Part Op Descriptions: **110** - Turn as per dwg 2-Deburr if necessary
160 - Issue P/O to ATG : 035802 1- Black Anodize as per Dwg, SEE NOTE #3 2- PRIME AS PER DWG, SEE NOTE #3 JAN 17 2017
210 - ***IDENTIFY AS PER APICAL MPP-120 BY STAMPING P# AND REV***

Job Allocations

Operation	Component Part	Required	Inventory	Allocated	Std Qty
90-Start up Operation	M6061T6R1.250	0	60	0	0

Part Specifications

Specifications could not be found.

Plex 11/14/17 7:45 AM dart.boucher.sylvie

DQA: _____ Date: _____ E

WORK ORDER NON-CONFORMANCE / UPDATE

DART AEROSPACE

QA Closed: D

Dart Aerospace Ltd.
1270 Aberdeen Street
Hawkesbury, ON K64 1K7
CANADA
TEL.: 1 613 632–5200
Email: sales@dartaero.com
www.dartaerospace.com

Work Order update only ☐

AGAINST DEPARTMENT/PROCESS

Cross tube	☐	Water Jet	☐	Engineering	☐
Small Fab	☐	Prod. Eng. Coor.	☐	Quality	☐
Finishing	☐	Rec/Store/Packaging	☐	Other	☐
Composite	☐	Supplier	☐		

DART AEROSPACE

S031908

Spacer

e :

Disposition

MRB (QSI042) Approval

Completed By

Lead hand / Supervisor Approval Verification

QC / QA Coordinator Approval

PART NO: 647.1713
Original Serial #: S031908
Revision:
Operation: Start up Operation
Change No:

Date: 01/13/18
Job No: 168293

Root Cause

Environment	☐	☐	No Re-verfication
Design	☐	☐	Operator
Doc/Data	☐	☐	Offset/Setup
Equip/Tooling	☐	☐	Supplier
Handling/Pre	☐	☐	Training
Material	☐	☐	Use for Testing
Internal Transport	☐	☐	Poor Information
Tribal Knowledge	☐	☐	Rushing
LOA	☐	☐	Product Improvement
Substation	☐	☐	Process Improvement
Past Expiry Date	☐	☐	Manufacturing Process
Misidentified	☐	☐	Past Due

FAULT CATEGORY

☐ Pressure/Forced	☐ Temperature/Cure	☐ Power Loss/Surge	☐ Positioned Wrong
☐ Bending	☐ Set-up	☐ Folio/Program	☐ Outside Dimensions
☐ Centre Not Concentric	☐ BOM/Route	☐ Grain	☐ Over/Under tolerance
☐ Cracks	☐ Broken/Damage/Defect	☐ Weld	☐ Part Incorrect
☐ Crimp/Kink/Ripple/Wave	☐ Inspection Incomplete/Unqualified	☐ Wrong Stock Pulled	☐ Part Lost/Missing
☐ Cuffs	☐ Contamination	☐ Out of Sequence	☐ Part Moved
☐ Crushing	☐ Countersink	☐ Off-set	☐ Drawing
☐ Heat Treat	☐ Cut Too Short	☐ Mislabeled	☐ Finish
☐ Wave/Twist in Tube	☐ Instructions Incomplete/Unclear	☐ Fit/Function	☐ Misread
☐ Marks/Chatter	☐ Drill Holes	☐ Misaligned/off center	☐ Turning Sequence

☐ OTHER :

THE INFORMATION CONTAINED IN THIS DRAWING IS THE SOLE PROPERTY OF APICAL INDUSTRIES DBA DART AEROSPACE. ANY REPRODUCTION IN PART OR WHOLE WITHOUT THE WRITTEN PERMISSION OF APICAL INDUSTRIES DBA DART AEROSPACE IS PROHIBITED.

REVISIONS			
REV.	DESCRIPTION	DATE	APPROVED
	LAST PROTOTYPE REVISION: PR2		N/C
N/C	INITIAL RELEASE	08/05/09	P. BRAVO
A	INCORPORATED ECN'S 02937 & 03921	06/07/13	P. BRAVO
B	INCORPORATED ECN 03970	07/03/13	P. BRAVO
C	INCORPORATED ECN 04058	08/14/13	P. BRAVO
D	INCORPORATED ECN'S 04679, 04702 & 04964	05/29/15	P. BRAVO
E	INCORPORATED ECN 05352	03/21/16	P. BRAVO

NOTES:

1. MATERIAL: 7075-T6 ALUMINUM PER AMS-QQ-A-250/12.
2. MATERIAL: 6061-T6 ALUMINUM BAR IAW AMS-QQ-A-250/11.
3. FINISH IAW MPP-172, SECTIONS 2.1, 3.1, & 4.2.
4. DEBURR AND BREAK ALL SHARP EDGES.
5. IDENTIFY IAW MPP-120.
6. P/N 647.1701:
   CLAMP F/N 1, 2, & 4; THEN MATE AND MATCH DRILL HOLES FROM F/N 1& 2 ONTO F/N 3 AS SHOWN ON SHEET 2.

   P/N 647.1702:
   FOLLOW SAME PROCEDURE FOR P/N 647.1702 USING F/N 9 & 10 IN PLACE OF 1 & 2.

   P/N 647.1703:
   FOLLOW SAME PROCEDURE FOR P/N 647.1703 USING F/N 11, 12, & 13 IN PLACE OF F/N 1, 2, & 3, RESPECTIVELY.
7. WITH EXCEPTION OF HOLE DIMENSION, ALL DIMENSIONS SAME AS P/N 647.1710 AND P/N 647.1711. RESPECTIVELY.
8. FOR P/N 647.1701 ASSEMBLY.
9. FOR P/N 647.1702 ASSEMBLY.
10. .323" DIA FOR P/N'S 647.1714 & 647.1715
    .257" DIA FOR P/N'S 647.1710 & 647.1711
11. RIVET SPACING AND ASSEMBLY TYPICAL FOR ALL CONFIGURATIONS.
12. FOR P/N 647.1703 ASSEMBLY.
13. FOR P/N 647.1701 & 647.1702 ASSEMBLIES.
14. FOR P/N 647.1703 ASSEMBLY.

SHOP COPY
RETURN TO
ENGINEERING
UNCONTROLLED COPY
SUBJECT TO AMENDMENT
WITHOUT NOTICE
WORK ORDER
NO. 168293

DAS
30
9-89

NOV 16 2017

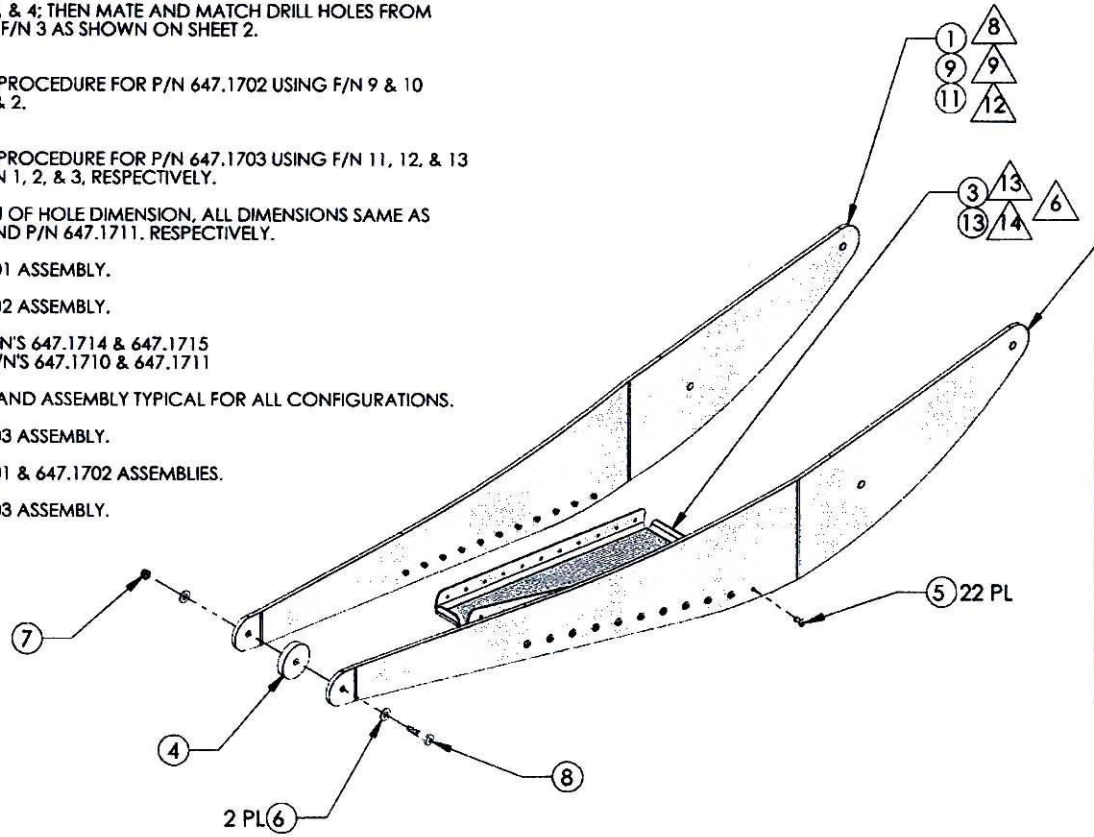

QTY			FIND #	PART #	DESCRIPTION	MATL	SPEC.
1			13	647.1718	GUSSET	△	△
1			12	647.1717	PLATE	△	△
1			11	647.1716	PLATE	△	△
	1		10	647.1715	PLATE	△	△
	1		9	647.1714	PLATE	△	△
1	1	1	8	601.1622	SCREW	MS27039-1-14	
1	1	1	7	601.2943	LOCKNUT	MS21042-3	
2	2	2	6	601.1607	WASHER	NAS1149F0332P	
22	22	22	5	601.1915	RIVET	CR3213-4-4	
1	1	1	4	647.1713	SPACER	△	△
	1	1	3	647.1712	GUSSET	△	△
		1	2	647.1711	PLATE	△	△
		1	1	647.1710	PLATE	△	△
X				647.1703	SKID DEFLECTOR ASSY		
	X			647.1702	SKID DEFLECTOR ASSY		
		X		647.1701	SKID DEFLECTOR ASSY		
.1703	.1702	.1701					

PARTS LIST

NEXT ASSY (S): 647.1300

ORIGINAL DATE (MO-DA-YR): 08-05-09
DRAWN BY: S. HUFF
CHECKER: P. BRAVO
DRAWING APPROVAL: P. BRAVO 08/05/09
CONTRACT No:

UNLESS OTHERWISE SPECIFIED DIMENSIONS ARE IN INCHES
TOLERANCES ARE:
2 PLACE DECIMALS ±.01
3 PLACE DECIMALS ±.005
ANGLES ± 2°

DART AEROSPACE
APICAL INDUSTRIES INC
DBA DART AEROSPACE
3030 ENTERPRISE CT., SUITE A
VISTA, CA. 92081
(760)-724-5300

SKID DEFLECTOR ASSY

SIZE	CAGE CODE	DWG. NO	REV.
B	07M26	647.1700	E

SCALE NONE | SHEET 1 OF 7

DQA: _____ Date: _____

WORK ORDER NON-CONFORMANCE / UPDATE

QA Closed: Date: Work Order update only ☐

Work Order: _____

Part No. _____

NCR No.

DISPOSITION

Rework	☐
Scrap	☐
Use-as-is	☐
Suspected Unapproved	☐

AGAINST DEPARTMENT/PROCESS

Skid-tube	☐	Cross tube	☐	Water Jet	☐	Engineering	☐
Machining	☐	Small Fab	☐	Prod. Eng. Coor.	☐	Quality	☐
Thermoforming	☐	Finishing	☐	Rec/Store/Packaging	☐	Other	☐
Large Fab	☐	Composite	☐	Supplier	☐		☐

Date :	Step #:	QTY Effective :	MRB (QSI042) Approval

Description Work Order Deviation	Disposition	Completed By
		Lead hand / Supervisor Approval Verification
		QC / QA Coordinator Approval

Root Cause

Environment	☐	☐	No Re-verfication
Design	☐	☐	Operator
Doc/Data	☐	☐	Offset/Setup
Equip/Tooling	☐	☐	Supplier
Handling/Pre	☐	☐	Training
Material	☐	☐	Use for Testing
Internal Transport	☐	☐	Poor Information
Tribal Knowledge	☐	☐	Rushing
LOA	☐	☐	Product Improvement
Substation	☐	☐	Process Improvement
Past Expiry Date	☐	☐	Manufacturing Process
Misidentified	☐	☐	Past Due

FAULT CATEGORY

☐	Pressure/Forced	☐	Temperature/Cure	☐	Power Loss/Surge	☐	Positioned Wrong
☐	Bending	☐	Set-up	☐	Folio/Program	☐	Outside Dimensions
☐	Centre Not Concentric	☐	BOM/Route	☐	Grain	☐	Over/Under tolerance
☐	Cracks	☐	Broken/Damage/Defect	☐	Weld	☐	Part Incorrect
☐	Crimp/Kink/Ripple/Wave	☐	Inspection Incomplete/Unqualified	☐	Wrong Stock Pulled	☐	Part Lost/Missing
☐	Cuffs	☐	Contamination	☐	Out of Sequence	☐	Part Moved
☐	Crushing	☐	Countersink	☐	Off-set	☐	Drawing
☐	Heat Treat	☐	Cut Too Short	☐	Mislabeled	☐	Finish
☐	Wave/Twist in Tube	☐	Instructions Incomplete/Unclear	☐	Fit/Function	☐	Misread
☐	Marks/Chatter	☐	Drill Holes	☐	Misaligned/off center	☐	Turning Sequence

☐ OTHER :

THE INFORMATION CONTAINED IN THIS DRAWING IS THE SOLE PROPERTY OF APICAL INDUSTRIES DBA DART AEROSPACE. ANY REPRODUCTION IN PART OR WHOLE WITHOUT THE WRITTEN PERMISSION OF APICAL INDUSTRIES DBA DART AEROSPACE IS PROHIBITED.

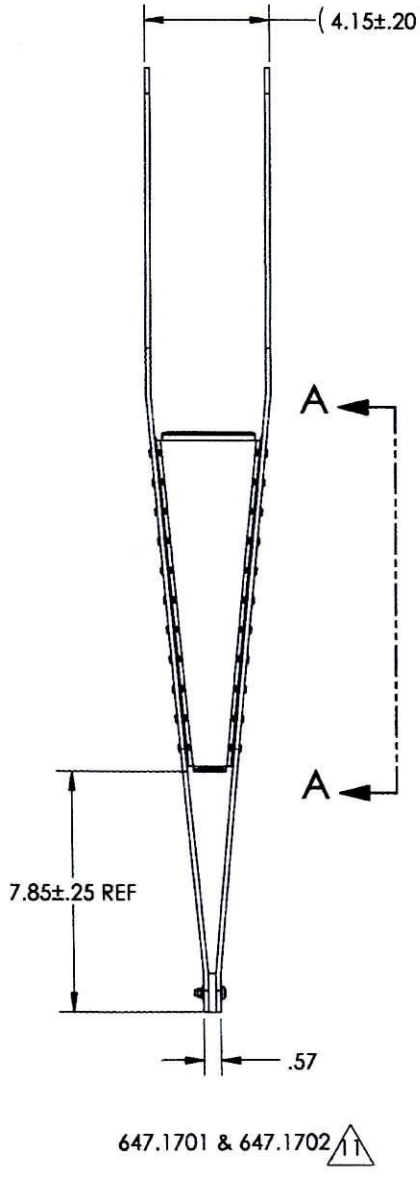

647.1701 & 647.1702 ⚠11

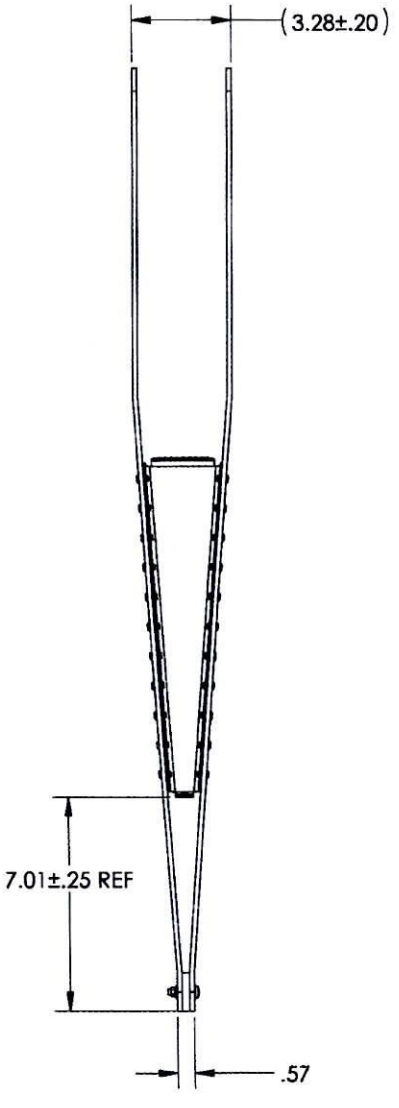

647.1703 ⚠11

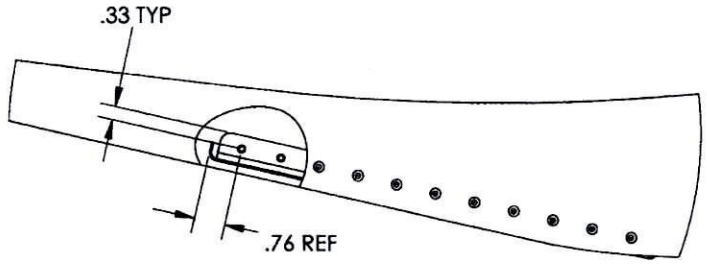

SECTION AA
TYP ALL CONFIGURATIONS ⚠11

ORIGINAL DATE (MO-DA-YY)	08-05-09
DRAWN BY	CHECKER
S. HUFF	P. BRAVO
DRAWING APPROVAL	
P. BRAVO	
08/05/09	
CONTRACT No.	

UNLESS OTHERWISE SPECIFIED
DIMENSIONS ARE IN INCHES
TOLERANCES ARE:
2 PLACE DECIMALS ±.01
3 PLACE DECIMALS ±.005
ANGLES ± .5°

DART AEROSPACE
APICAL INDUSTRIES, INC.
dba DART AEROSPACE
3030 ENTERPRISE CT., SUITE A
VISTA, CA. 92081
(760)-724-5300

SKID DEFLECTOR ASSY

SIZE	CAGE CODE	DWG. NO	REV.
B	07M26	647.1700	E

SCALE NONE | SHEET 2 OF 7

DQA: _____ Date: _____

WORK ORDER NON-CONFORMANCE / UPDATE

DART AEROSPACE

QA Closed: Date: Work Order update only ☐

Work Order: _____

Part No. _____

NCR No.

DISPOSITION

Rework	☐
Scrap	☐
Use-as-is	☐
Suspected Unapproved	☐

AGAINST DEPARTMENT/PROCESS

Skid-tube	☐	Cross tube	☐	Water Jet	☐	Engineering	☐
Machining	☐	Small Fab	☐	Prod. Eng. Coor.	☐	Quality	☐
Thermoforming	☐	Finishing	☐	Rec/Store/Packaging	☐	Other	☐
Large Fab	☐	Composite	☐	Supplier	☐		☐

Date :	Step #:	QTY Effective :	MRB (QSI042) Approval

Description Work Order Deviation	Disposition	Completed By
		Lead hand / Supervisor Approval Verification
		QC / QA Coordinator Approval

Root Cause

Environment	☐	☐	No Re-verfication
Design	☐	☐	Operator
Doc/Data	☐	☐	Offset/Setup
Equip/Tooling	☐	☐	Supplier
Handling/Pre	☐	☐	Training
Material	☐	☐	Use for Testing
Internal Transport	☐	☐	Poor Information
Tribal Knowledge	☐	☐	Rushing
LOA	☐	☐	Product Improvement
Substation	☐	☐	Process Improvement
Past Expiry Date	☐	☐	Manufacturing Process
Misidentified	☐	☐	Past Due

FAULT CATEGORY

☐	Pressure/Forced	☐	Temperature/Cure	☐	Power Loss/Surge	☐	Positioned Wrong
☐	Bending	☐	Set-up	☐	Folio/Program	☐	Outside Dimensions
☐	Centre Not Concentric	☐	BOM/Route	☐	Grain	☐	Over/Under tolerance
☐	Cracks	☐	Broken/Damage/Defect	☐	Weld	☐	Part Incorrect
☐	Crimp/Kink/Ripple/Wave	☐	Inspection Incomplete/Unqualified	☐	Wrong Stock Pulled	☐	Part Lost/Missing
☐	Cuffs	☐	Contamination	☐	Out of Sequence	☐	Part Moved
☐	Crushing	☐	Countersink	☐	Off-set	☐	Drawing
☐	Heat Treat	☐	Cut Too Short	☐	Mislabeled	☐	Finish
☐	Wave/Twist in Tube	☐	Instructions Incomplete/Unclear	☐	Fit/Function	☐	Misread
☐	Marks/Chatter	☐	Drill Holes	☐	Misaligned/off center	☐	Turning Sequence

☐ OTHER :

THE INFORMATION CONTAINED IN THIS DRAWING IS THE SOLE PROPERTY OF APICAL INDUSTRIES DBA DART AEROSPACE. ANY REPRODUCTION IN PART OR WHOLE WITHOUT THE WRITTEN PERMISSION OF APICAL INDUSTRIES DBA DART AEROSPACE IS PROHIBITED.

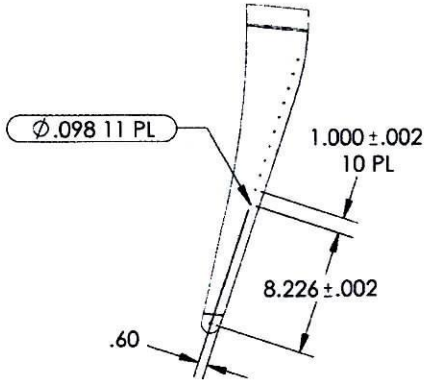

SECTION B-B

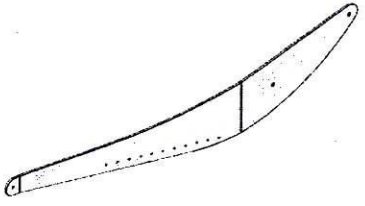

647.1711 SHOWN
647.1710 OPPOSITE

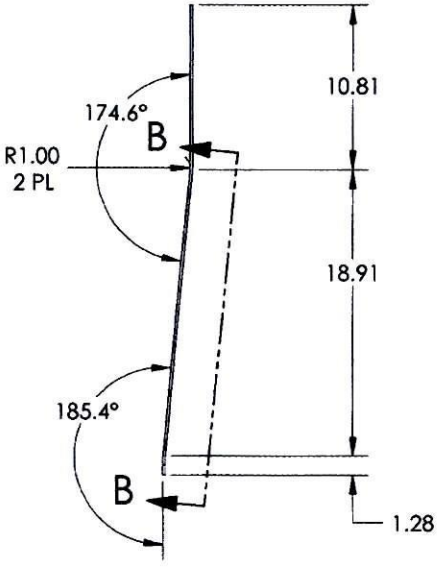

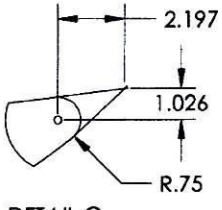

DETAIL C

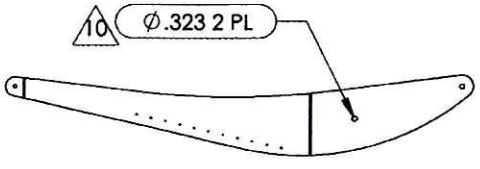

647.1714 SHOWN
647.1715 OPPOSITE 7

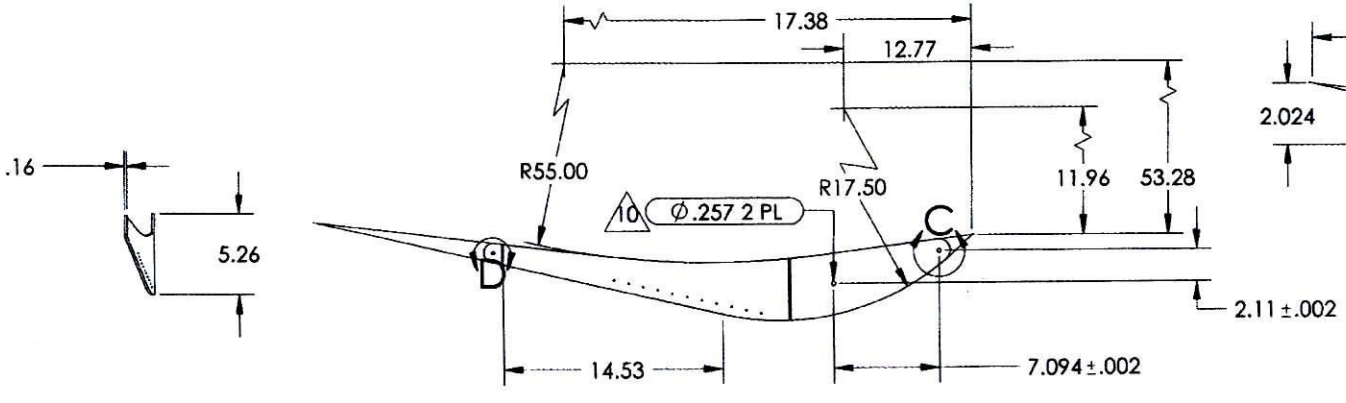

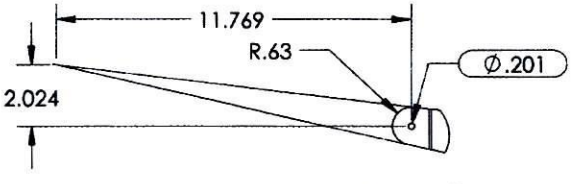

DETAIL D

ORIGINAL DATE (MO-DA-YR)	08-05-09		
DRAWN BY	S. HUFF	CHECKED	P. BRAVO
DRAWING APPROVAL	P. BRAVO 08/05/09		
CONTRACT NO.			

UNLESS OTHERWISE SPECIFIED
DIMENSIONS ARE IN INCHES
TOLERANCES ARE:
2 PLACE DECIMALS ±.01
3 PLACE DECIMALS ±.005
ANGLES ± .5°

DART AEROSPACE
APICAL INDUSTRIES, INC. dba DART AEROSPACE
3030 ENTERPRISE CT., SUITE A
VISTA, CA. 92081
(760)-724-5300

SKID DEFLECTOR ASSY

SIZE	CAGE CODE	DWG. NO.	REV
B	07MZ6	647.1700	E

SCALE NONE | SHEET 3 OF 7

DQA: _____ Date: _____

WORK ORDER NON-CONFORMANCE / UPDATE

QA Closed: Date: Work Order update only ☐

Work Order: _____

Part No. _____

NCR No.

DISPOSITION

Rework	☐
Scrap	☐
Use-as-is	☐
Suspected Unapproved	☐

AGAINST DEPARTMENT/PROCESS

Skid-tube	☐	Cross tube	☐	Water Jet	☐	Engineering	☐
Machining	☐	Small Fab	☐	Prod. Eng. Coor.	☐	Quality	☐
Thermoforming	☐	Finishing	☐	Rec/Store/Packaging	☐	Other	☐
Large Fab	☐	Composite	☐	Supplier	☐		

Date :	Step #:	QTY Effective :	**MRB (QSI042) Approval**

Description Work Order Deviation	**Disposition**	**Completed By**
		Lead hand / Supervisor Approval Verification
		QC / QA Coordinator Approval

Root Cause

Environment	☐	☐	No Re-verfication
Design	☐	☐	Operator
Doc/Data	☐	☐	Offset/Setup
Equip/Tooling	☐	☐	Supplier
Handling/Pre	☐	☐	Training
Material	☐	☐	Use for Testing
Internal Transport	☐	☐	Poor Information
Tribal Knowledge	☐	☐	Rushing
LOA	☐	☐	Product Improvement
Substation	☐	☐	Process Improvement
Past Expiry Date	☐	☐	Manufacturing Process
Misidentified	☐	☐	Past Due

FAULT CATEGORY

☐	Pressure/Forced	☐	Temperature/Cure	☐	Power Loss/Surge	☐	Positioned Wrong
☐	Bending	☐	Set-up	☐	Folio/Program	☐	Outside Dimensions
☐	Centre Not Concentric	☐	BOM/Route	☐	Grain	☐	Over/Under tolerance
☐	Cracks	☐	Broken/Damage/Defect	☐	Weld	☐	Part Incorrect
☐	Crimp/Kink/Ripple/Wave	☐	Inspection Incomplete/Unqualified	☐	Wrong Stock Pulled	☐	Part Lost/Missing
☐	Cuffs	☐	Contamination	☐	Out of Sequence	☐	Part Moved
☐	Crushing	☐	Countersink	☐	Off-set	☐	Drawing
☐	Heat Treat	☐	Cut Too Short	☐	Mislabeled	☐	Finish
☐	Wave/Twist in Tube	☐	Instructions Incomplete/Unclear	☐	Fit/Function	☐	Misread
☐	Marks/Chatter	☐	Drill Holes	☐	Misaligned/off center	☐	Turning Sequence

☐ OTHER :

THE INFORMATION CONTAINED IN THIS DRAWING IS THE SOLE PROPERTY OF APICAL INDUSTRIES DBA DART AEROSPACE. ANY REPRODUCTION IN PART OR WHOLE WITHOUT THE WRITTEN PERMISSION OF APICAL INDUSTRIES DBA DART AEROSPACE IS PROHIBITED.

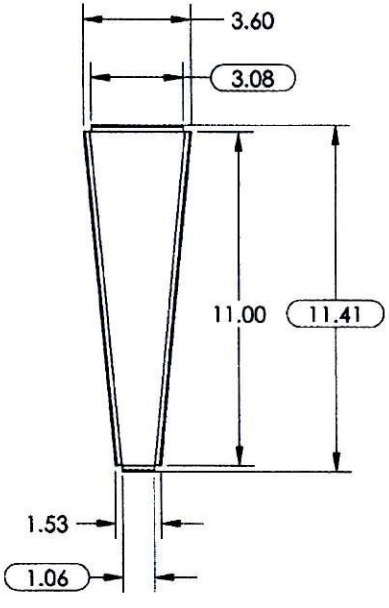

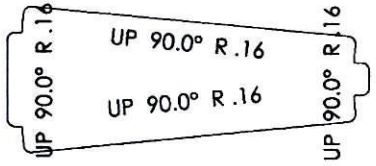

FLAT PATTERN

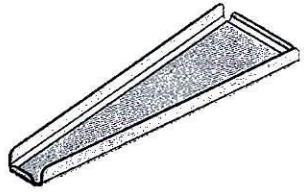

647.1712

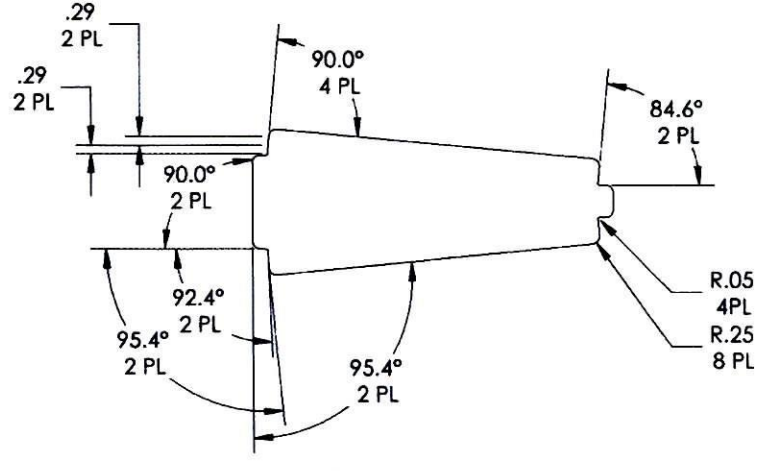

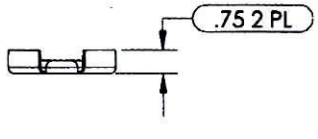

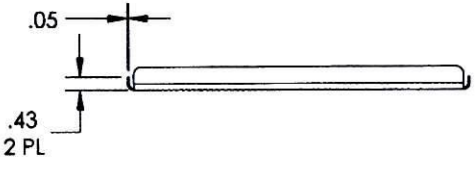

ORIGINAL DATE (MO-DA-YR) 08-05-09	DART AEROSPACE 3030 ENTERPRISE CT., SUITE A VISTA, CA. 92081 (760)-724-5300
DRAWN BY S. HUFF / CHECKER P. BRAVO	APICAL INDUSTRIES, INC. dba DART AEROSPACE
DRAWING APPROVAL P. BRAVO 08-05-09	SKID DEFLECTOR ASSY
CONTRACT No.	SIZE B / CAGE CODE 07MZ6 / DWG. NO. 647.1700 / REV. E
UNLESS OTHERWISE SPECIFIED DIMENSIONS ARE IN INCHES TOLERANCES ARE: 2 PLACE DECIMALS ±.01, 3 PLACE DECIMALS ±.005, ANGLES ± .5°	SCALE NONE / SHEET 4 OF 7

DQA: _____ Date: _____

WORK ORDER NON-CONFORMANCE / UPDATE

QA Closed: Date: Work Order update only ☐

Work Order: _____

Part No. _____

NCR No.

DISPOSITION

Rework	☐
Scrap	☐
Use-as-is	☐
Suspected Unapproved	☐

AGAINST DEPARTMENT/PROCESS

Skid-tube	☐	Cross tube	☐	Water Jet	☐	Engineering	☐
Machining	☐	Small Fab	☐	Prod. Eng. Coor.	☐	Quality	☐
Thermoforming	☐	Finishing	☐	Rec/Store/Packaging	☐	Other	☐
Large Fab	☐	Composite	☐	Supplier	☐		☐

Date :	Step #:	QTY Effective :	MRB (QSI042) Approval

Description Work Order Deviation	Disposition	Completed By
		Lead hand / Supervisor Approval Verification
		QC / QA Coordinator Approval

Root Cause

Environment	☐	☐	No Re-verfication
Design	☐	☐	Operator
Doc/Data	☐	☐	Offset/Setup
Equip/Tooling	☐	☐	Supplier
Handling/Pre	☐	☐	Training
Material	☐	☐	Use for Testing
Internal Transport	☐	☐	Poor Information
Tribal Knowledge	☐	☐	Rushing
LOA	☐	☐	Product Improvement
Substation	☐	☐	Process Improvement
Past Expiry Date	☐	☐	Manufacturing Process
Misidentified	☐	☐	Past Due

FAULT CATEGORY

☐ Pressure/Forced	☐ Temperature/Cure	☐ Power Loss/Surge	☐ Positioned Wrong
☐ Bending	☐ Set-up	☐ Folio/Program	☐ Outside Dimensions
☐ Centre Not Concentric	☐ BOM/Route	☐ Grain	☐ Over/Under tolerance
☐ Cracks	☐ Broken/Damage/Defect	☐ Weld	☐ Part Incorrect
☐ Crimp/Kink/Ripple/Wave	☐ Inspection Incomplete/Unqualified	☐ Wrong Stock Pulled	☐ Part Lost/Missing
☐ Cuffs	☐ Contamination	☐ Out of Sequence	☐ Part Moved
☐ Crushing	☐ Countersink	☐ Off-set	☐ Drawing
☐ Heat Treat	☐ Cut Too Short	☐ Mislabeled	☐ Finish
☐ Wave/Twist in Tube	☐ Instructions Incomplete/Unclear	☐ Fit/Function	☐ Misread
☐ Marks/Chatter	☐ Drill Holes	☐ Misaligned/off center	☐ Turning Sequence

☐ OTHER :

THE INFORMATION CONTAINED IN THIS DRAWING IS THE SOLE PROPERTY OF APICAL INDUSTRIES DBA DART AEROSPACE. ANY REPRODUCTION IN PART OR WHOLE WITHOUT THE WRITTEN PERMISSION OF APICAL INDUSTRIES DBA DART AEROSPACE IS PROHIBITED.

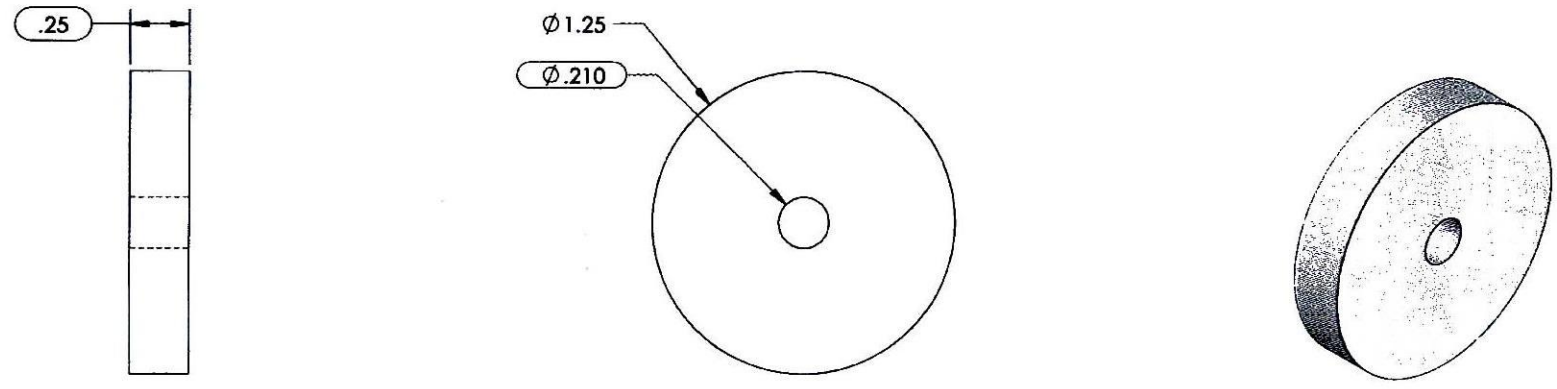

647.1713

ORIGINAL DATE (MO-DA-YR)	08-05-09
DRAWN BY S. HUFF	CHECKER P. BRAVO
DRAWING APPROVAL P. BRAVO 08/05/09	
CONTRACT No	
UNLESS OTHERWISE SPECIFIED DIMENSIONS ARE IN INCHES TOLERANCES ARE: 2 PLACE DECIMALS ±.01 3 PLACE DECIMALS ±.005 ANGLES ± .5°	

DART AEROSPACE
APICAL INDUSTRIES, INC. dba DART AEROSPACE
3030 ENTERPRISE CT., SUITE A
VISTA, CA. 92081
(760)-724-5300

SKID DEFLECTOR ASSY

SIZE	CAGE CODE	DWG. NO	REV
B	07M26	647.1700	E

SCALE NONE | SHEET 5 OF 7

DQA: _____ Date: _____

WORK ORDER NON-CONFORMANCE / UPDATE

DART AEROSPACE

QA Closed: Date: Work Order update only ☐

Work Order: _____

Part No. _____

NCR No.

DISPOSITION

Rework ☐
Scrap ☐
Use-as-is ☐
Suspected Unapproved ☐

AGAINST DEPARTMENT/PROCESS

Skid-tube	☐	Cross tube	☐	Water Jet	☐	Engineering	☐
Machining	☐	Small Fab	☐	Prod. Eng. Coor.	☐	Quality	☐
Thermoforming	☐	Finishing	☐	Rec/Store/Packaging	☐	Other	☐
Large Fab	☐	Composite	☐	Supplier	☐		

Date :	Step #:	QTY Effective :	MRB (QSI042) Approval

Description Work Order Deviation	Disposition	Completed By
		Lead hand / Supervisor Approval Verification
		QC / QA Coordinator Approval

Root Cause

Environment	☐	☐	No Re-verfication
Design	☐	☐	Operator
Doc/Data	☐	☐	Offset/Setup
Equip/Tooling	☐	☐	Supplier
Handling/Pre	☐	☐	Training
Material	☐	☐	Use for Testing
Internal Transport	☐	☐	Poor Information
Tribal Knowledge	☐	☐	Rushing
LOA	☐	☐	Product Improvement
Substation	☐	☐	Process Improvement
Past Expiry Date	☐	☐	Manufacturing Process
Misidentified	☐	☐	Past Due

FAULT CATEGORY

☐	Pressure/Forced	☐	Temperature/Cure	☐	Power Loss/Surge	☐	Positioned Wrong
☐	Bending	☐	Set-up	☐	Folio/Program	☐	Outside Dimensions
☐	Centre Not Concentric	☐	BOM/Route	☐	Grain	☐	Over/Under tolerance
☐	Cracks	☐	Broken/Damage/Defect	☐	Weld	☐	Part Incorrect
☐	Crimp/Kink/Ripple/Wave	☐	Inspection Incomplete/Unqualified	☐	Wrong Stock Pulled	☐	Part Lost/Missing
☐	Cuffs	☐	Contamination	☐	Out of Sequence	☐	Part Moved
☐	Crushing	☐	Countersink	☐	Off-set	☐	Drawing
☐	Heat Treat	☐	Cut Too Short	☐	Mislabeled	☐	Finish
☐	Wave/Twist in Tube	☐	Instructions Incomplete/Unclear	☐	Fit/Function	☐	Misread
☐	Marks/Chatter	☐	Drill Holes	☐	Misaligned/off center	☐	Turning Sequence

☐ OTHER :

DART AEROSPACE LTD	Work Order:	168293
Description: ~~Spacer~~ Skid deflector assy	Part Number:	647.1713
Inspection Dwg: 647.1713 Rev: E		Page 1 of 1

INSPECTION SHEET

Drawing Dimension	Tolerance	Actual Dimension	Accept	Reject	Method of Inspection	Comments
0.25	± 0.010	0.248	✓		Vernier	VIS-01
1.25	± 0.010	1.245	✓		↓	↓
Ø0.210	+0.005/-0.001	0.213	✓			

Measured by:	DAS 23	Checked by:	FT	QC Inspector:	
Date:	18/13/1 YY DD MM	Date:	18-1-13	Date:	

Engineering Approval: (If necessary)		Date:	

Rev	Date	Change	Revised by	Approved
B	14.07.31	New Issue	KJ	

Dart Aerospace Ltd.
1270 Aberdeen St
Hawkesbury, ON
K6A 1K7
Canada

Tel (613) 632-5200

PURCHASE ORDER
PO038802

Supplier: ATG001-VC
A.T.G. Industries Inc
731 INDUSTRIELLE ROAD
ROCKLAND
ON
K4K 1T2 Canada
Phone: 613-446-4544
Fax: 613-446-4556

Attention: Lalande, Marc-Andre

Ship To: 1270 Aberdeen Street
Hawkesbury
ON
K6A 1K7 Canada
Phone: 613-632-5200

PO No: PO038802
PO Date: 1/17/18
Due Date: 1/31/18
Purchase Order Revision:
Revision Date:
Ship-To Contact: Baker, DianePhone: dbaker@dartaero.com
Via: Ground
Pymt Terms: Net 30
Freight Terms:
Special Comments:

E-MAILED JAN 30 2018

Items

Line Item	Job	Part	Description	Status	Due Date	Order Quantity	Received Quantity	Balance	Unit Price (CAD)	Extended Price
1	170136	D2348 See attached	Wearplate (Key Way) Issue P/O:_____ Black Anodize per Dwg D2348 Rev. C	Firmed	1/31/18	20 pcs	0 pcs	20 pcs	$5.76/pcs	$115.20
Line Item Note	RUSH!!!!!									
2	169475	647.7811 See attached	Bracket B Issue P/O to ATG : _____ Hard Black Anodize and Prime as per Dwg 647.7800 Rev. A	Firmed	1/31/18	10 pcs	0 pcs	10 pcs	$15.63/pcs	$156.30
Line Item Note	RUSH!!!!									
3	170172	647.7812 ~~See attached~~ See attached	Center Plate, Upper Issue P/O to ATG : _____ Hard Black Anodize and Prime Dwg 647.7800 Rev. A	Firmed	1/31/18	6 pcs	0 pcs	6 pcs	$9.88/pcs	$59.28
Line Item Note	RUSH!!!!!									
4	168218	646.3011	RH Half Issue P/O to ATG : _____ Hard Black Anodize, Color Black and Prime as Per Dwg 646.3000	Firmed	1/31/18	10 pcs	0 pcs 10X	10 pcs	$11.38/pcs 18/02/02 MF	$113.80
Line Item Note	RUSH!!!!									
5	168219	646.3012	Lower Guide Issue P/O to ATG : _____ Hard Anodize, Color Black and Prime as per Dwg 646.3000	Firmed	1/31/18	10 pcs	0 pcs 10X	10 pcs	$21.03/pcs 18/02/02 MF	$210.30
Line Item Note	RUSH!!!!									
6	168217	646.3010		Firmed	1/31/18	6 pcs ~~/~~	0 pcs 6X	6 pcs	$11.38/pcs AF 18/02/07	$68.28

Dart Aerospace Ltd.
1270 Aberdeen St
Hawkesbury, ON
K6A 1K7
Canada

Tel (613) 632-5200

PURCHASE ORDER
PO038802

Items

Line Item	Job	Part	Description	Status	Due Date	Order Quantity	Received Quantity	Balance	Unit Price (CAD)	Extended Price
			LH Half Issue P/O to ATG : _____ Hard Black Anodize and Prime as per Dwg 646.3000							
7	168018	646.3011	RH Half Issue P/O to ATG : _____ Hard Black Anodize, Color Black and Prime as Per Dwg 646.3000	Firmed	1/31/18	4 pcs ✓	0 pcs 4x	4 pcs AT	$11.38/pcs (8/02/07	$45.52
8	168241	646.3711	Clip Issue P/O to ATG : _____ Hard Black Anodize and Prime as per Dwg 646.3700 Rev. A	Firmed	1/31/18	12 pcs ✓	0 pcs 12x	12 pcs AT	$7.23/pcs (8/02/07	$86.76
9	168242	646.3712	Clip Issue P/O to ATG : _____ Hard Anodize, Color Black and Prime as Per Dwg 646.3712 Rev. A	Firmed	1/31/18	12 pcs ✓	0 pcs 12x	12 pcs AT	$7.23/pcs (8/02/07	$86.76
10	168243	646.3713	Gusset Issue P/O to ATG : _____ Hard Anodize, Color Black and Prime as per Dwg 646.3700	Firmed	1/31/18	10 pcs ✓	0 pcs 10x	10 pcs AT	$16.88/pcs (8/02/07	$168.80
11	168244	646.3714	Gusset Issue P/O to ATG : _____ Hard Anodize, Color Black and Prime as per Dwg 646.3700 Rev. A	Firmed	1/31/18	12 pcs ✓	0 pcs 12x	12 pcs AT	$16.88/pcs (8/02/07	$202.56
12	169366	646.9810	Deflector Issue P/O to ATG : _____ Hard Black Anodize and Prime as per Dwg 646.9800 Rev. A	Firmed	1/31/18	10 pcs	0 pcs	10 pcs	$48.38/pcs	$483.80
13	168275	647.0113	Strut Doubler Issue P/O to ATG : _____ Hard anodize, Color Black and Prime as Per Dwg 647.0100 Rev. A	Firmed	1/31/18	15 pcs ✓	0 pcs 15x	15 pcs AT	$12.88/pcs (8/02/07	$193.20
14	168285	647.1510	Upper Deflector Issue P/O to ATG : _____ Hard Black Anodize and Prime as per Dwg 647.1500 Rev. D	Firmed	1/31/18	4 pcs ✓	0 pcs 4x	4 pcs AT	$21.78/pcs (8/02/07	$87.12
15	168293	647.1713	Spacer Issue P/O to ATG :	Firmed	1/31/18	20 pcs ✓	0 pcs 20x	20 pcs AT	$5.38/pcs (8/02/07	$107.60

Dart Aerospace Ltd.
1270 Aberdeen St
Hawkesbury, ON
K6A 1K7
Canada

Tel (613) 632-5200

PURCHASE ORDER
PO038802

Items

Line Item	Job	Part	Description	Status	Due Date	Order Quantity	Received Quantity	Balance	Unit Price (CAD)	Extended Price
			Hard Black Anodize and Prime as per Dwg. 647.1700 Rev. E							
16	169481	647.1714	Plate Issue P/O to ATG : Hard Anodize and Prime as Per Dwg 647.1700 Rev. E	Firmed	1/31/18	10 pcs	0 pcs	10 pcs	$31.38/pcs	$313.80
17	169482	647.1715	Plate Issue P/O to ATG : Hard Black Anodize and Prime as per Dwg 647.1700 Rev. E	Firmed	1/31/18	10 pcs	0 pcs	10 pcs	$31.38/pcs	$313.80
18	169479	647.7816	Aft Bracket Issue P/O to ATG : Hard Black Anodize and Prime as per Dwg 647.7800 Rev. A	Firmed	1/31/18	10 pcs ✓	0 pcs 10X	10 pcs AT	$7.98/pcs (8/02/07)	$79.80
19	169480	647.7817	Aft Bracket Issue P/O to ATG : Hard Black Anodize and Prime as per Dwg 647.7800 Rev. A	Firmed	1/31/18	6 pcs ✓	0 pcs 6X	6 pcs AT	$7.98/pcs (8/03/07)	$47.88
20	169484	647.7611	Lower Deflector Issue P/O to ATG : Hard Black Anodize and Prime as per Dwg 647.7600	Firmed	1/31/18	6 pcs ✓	0 pcs 6X	6 pcs AT	$13.18/pcs (8/02/07)	$79.08
21	169474	647.7810	Bracket A Issue P/O to ATG : Hard Black Anodize and Prime as per Dwg 647.7800 Rev. A	Firmed	1/31/18	4 pcs	0 pcs	4 pcs	$12.03/pcs	$48.12
22	169476	647.7813	Center Plate, Lower Issue P/O to ATG : Hard Black Anodize and Prime as per Dwg. 647.7800 Rev. A	Firmed	1/31/18	6 pcs ✓	0 pcs 6X	6 pcs AT	$9.88/pcs (8/02/07)	$59.28
23	169477	647.7814	Fwd Bracket Issue P/O to ATG : Hard Black Anodize and Prime as per Dwg. 647.7800 Rev. A	Firmed	1/31/18	6 pcs ✓	0 pcs 6X	6 pcs AT	$7.98/pcs 18/03/07	$47.88
24	169478	647.7815		Firmed	1/31/18	6 pcs ✓	0 pcs 6X	6 pcs AT	$7.98/pcs (8/02/07)	$47.88

Dart Aerospace Ltd.
1270 Aberdeen St
Hawkesbury, ON
K6A 1K7
Canada

Tel (613) 632-5200

PURCHASE ORDER
PO038802

Items

Line Item	Job	Part	Description	Status	Due Date	Order Quantity	Received Quantity	Balance	Unit Price (CAD)	Extended Price
			Fwd Bracket Issue P/O to ATG : _____							
25	168297	647.1817	Support RH ISSUE P/O:_____ Hard Anodize, Color Black As Per Dwg. 647.1800 Rev. A	Firmed	1/31/18	4 pcs	0 pcs / 4x	4 pcs AT	$12.63/pcs 18/02/07	$50.52
26	169392	647.7910	Angle Bracket ISSUE P/O:_____ Hard Anodize, Color Black and Prime as per Dwg. 647.7900 Rev.	Firmed	1/31/18	22 pcs	0 pcs / 22x	22 pcs AT	$9.13/pcs 18/02/07	$200.86
27	169393	647.7912	Clip ISSUE P/O:_____ Hard Anodize, Color Black and Prime As Per Dwg. 647.7900	Firmed	1/31/18	8 pcs	0 pcs / 8x	8 pcs AT	$10.73/pcs 18/02/07	$85.84
28	169397	647.7916	Bracket ISSUE P/O:_____ Hard Anodize, Color Black and Prime as per Dwg 647.7900	Firmed	1/31/18	10 pcs	0 pcs / 10x	10 pcs AT	$10.48/pcs 18/02/07	$104.80
(29)	169914	SWA6A-800A	Connector Bushing -Issue P/O to ATG: _____ -ANODIZE COLOR CLEAR, PER IAW MIL-A-8625F TYPE 2 CLASS 1 WATER SEAL - Certificate of Conformity is required	Firmed	1/31/18	10 pcs	0 pcs 10x	10 pcs	$5.88/pcs 18/02/02 mrf	$58.80
30	169929	RBW6405G02131-3G-3	Bell -Issue P/O to ATG: _____ ANODIZE COLOR CLEAR, PER IAW MIL-A-8625F TYPE 2 CLASS 1 Water seal - Certificate of Conformity is required	Firmed	1/31/18	3 pcs	0 pcs Rec'd Jan 26.	3 pcs	$5.76/pcs	$17.28
31	170021	RB877528-4-21	Cap -Issue P/O to ATG: _____ -ANODIZE COLOR BLACK, PER IAW MIL-A-8625F TYPE 2 CLASS 2 -Certification of Comformity is required	Firmed	1/31/18	4 pcs	0 pcs Rec'd Jan 26	4 pcs	$5.76/pcs	$23.04
(32)	169858	RBD29905-5	Hook -Issue P/O to ATG : PO _____	Firmed	1/31/18	4 pcs	0 pcs 4x	4 pcs	$38.63/pcs 18/02/02 mrf	$154.52

Dart Aerospace Ltd.
1270 Aberdeen St
Hawkesbury, ON
K6A 1K7
Canada

Tel (613) 632-5200

PURCHASE ORDER
PO038802

Items

Line Item	Job	Part	Description	Status	Due Date	Order Quantity	Received Quantity	Balance	Unit Price (CAD)	Extended Price
			-ANODIZE COLOR RED, PER IAW MIL-A-8625 TYPE-2 CLASS-2, Water sealant -Certificate of Conformity is required							
									Grand Total:	$3,918.46

Order Notes

Procurement Quality Clauses
A005 right of entry
A012 chemical and physical test report
A016 personnel qualification
A017 raw material identification (as applicable)

A022 Apical Processing
A024 process certifications
A026 certification of material conformance

A041 quality management system
A042 dart notification by supplier
A043 retension of quality documents

A048 counterfeit parts avoidance, detection, mitigation and disposition program

A049 supplier awareness

Terms & Condition of Purchasing(Suppliers) and Procurement Quality Clauses are an integral part of our AS9100 requirements. To learn in detail, please visit www.dartaerospace.com for further explanation.

Plex 1/30/18 8:45 AM dart.baker.diane

A.T.G. Industries Inc.
731 Industrielle Street
Rockland, ON K4K 1T2
Canada

Ph: (613) 446-4544 Fax: (613) 446-4556

Pack List

Number: 914585 Date: 06-Feb-18

To

Dart Aerospace Ltd
1270 Aberdeen St
Hawkesbury, ON K6A 1K7

Ph: 613 632-9577 Fax: 613 632-1053

Ship To

Diane Baker
Dart Aerospace Ltd
1270 Aberdeen St
Hawkesbury, ON K6A 1K7

Ph: 613 632-9577 Fax: 613 632-1053

Terms	Ship Via
	OUR TRUCK

Quantity	Description
	Please reference this document's Pack List number on all correspondences regarding this shipment. If you have any questions, please contact us.
20 ea	Part: 647.1713 Rev: E Spacer Hard Black Anodize per MIL-A-8625F, Type III, Class 2, .0005-.0045" (.5 - 4.5mils) Prime per MIL-PRF-23377, Type I, Class N (Customer Supplied), .0006-.0009" (.6 - .9 mils) per drawing. Job: 22384 PO: PO038802 Line: 15
6 ea	Part: 647.7815 Rev: A Fwd Bracket Hard Black Anodize per MIL-A-8625F, Type III, Class 2, .0005-.0045" (.5 - 4.5mils) Prime per MIL-PRF-23377, Type I, Class N (Customer Supplied), .0006-.0009" (.6 - .9 mils) per drawing. Job: 22393 PO: PO038802 Line: 24
22 ea	Part: 647.7910 Rev: NC Angle Bracket Hard Black Anodize per MIL-A-8625F, Type III, Class 2, .0005-.0045" (.5 - 4.5mils) Prime per MIL-PRF-23377, Type I, Class N (Customer Supplied), .0006-.0009" (.6 - .9 mils) per drawing. Job: 22395 PO: PO038802 Line: 26
12 ea	Part: 646.3711 Rev: A Clip ANO/PRIME1 Job: 22377 PO: PO038802 Line: 8
	CERTIFICATE OF CONFORMANCE A.T.G Industries Inc. certifies that all items in this shipment conform to the requirements. Date: 6/2/18 Certified Signature: [signature]

Made in Canada.

A.T.G. Industries Inc.
731 Industrielle Street
Rockland, ON K4K 1T2
Canada

Ph: (613) 446-4544 Fax: (613) 446-4556

Pack List

Number: 914585 Date: 06-Feb-18

To

Dart Aerospace Ltd
1270 Aberdeen St
Hawkesbury, ON K6A 1K7

Ph: 613 632-9577 Fax: 613 632-1053

Ship To

Diane Baker
Dart Aerospace Ltd
1270 Aberdeen St
Hawkesbury, ON K6A 1K7

Ph. 613 632-9577 Fax: 613 632-1053

Terms	Ship Via
	OUR TRUCK

Quantity	Description
	Receiver Signature: _____
	A.T.G Industries Inc. is AS9100 Registered and Nadcap Chemical Processing Accredited.
	Note: This Packing Slip may contain parts that have been PLATED. Items that are plated may be subject to natural tarnishing and it is suggested that they be inspected within 24 hours of receipt.

Made in Canada.